
DWARF STOVES

# MANUAL

Installation, Use & Maintenance

# THANKS FOR YOUR PURCHASE!

**We are excited that you chose a Dwarf Stove for your space and we can't wait to see it installed!**

Before installing and using your stove please take some time to read this manual cover-to-cover. We've tried to leave out the dry formalities and instead provide helpful information on assembling, installing and using your small wood stove.

If you have questions after reading this manual please get in touch!

TINY WOOD STOVE
SMALL STOVES FOR TINY SPACES

**TINY WOOD STOVE LLC**
**1329 BIZTOWN LOOP**
**HAYDEN, ID 83835**

**(208) 352-3417 • support@tinywoodstove.com**

TINY WOOD STOVE
**TINYWOODSTOVE.COM**

# Table of Contents

TINY WOOD STOVE
SMALL STOVES FOR TINY SPACES

***For tiny dwellers by tiny dwellers with love from Idaho.***

## WARNING

**Improper use or installation of a wood burning stove can cause fire, injury, and death.**

Use only solid fuel rated stove pipe, observe proper clearances, burn only approved fuels in your stove, and maintain smoke and carbon monoxide alarms at all times. Regularly inspect and clean the flue system to prevent blockages and creosote buildup.

This manual is intended to provide general information on the installation of wood stoves and is not an exhaustive reference. This manual is not to be used as a substitute for the advice of a qualified professional. Local laws and building codes vary, and codes should be strictly followed if they differ from information included in this manual. If you are attempting a DIY installation where installation by an unlicensed installer is permitted, inspection of the completed installation by a professional is highly recommended.

If you have any doubts about your small stove installation, please ask for help from a professional installer!

# APPLICATIONS

Our Dwarf stoves are designed specifically for small spaces less than 500 square feet like tents, trailers, boats, and tiny houses.

This stove is not currently certified (UL/CSA) for residential heating and only offered for recreational use.

In some cases, you may be permitted to install a non-certified stove in a residential space. Typically, building codes have a section on clearances and flue requirements for installing a non-listed stove in a residential space. Laws and building codes differ depending on location, so you should check with your local code enforcement and your homeowner's insurance company before planning your project. To locate a professional installer in your area, contact your local chimney sweep company.

# WARRANTY

We created the Dwarf stove with quality, efficiency, and affordability in mind. With proper operation and maintenance, your stove should give you many years of trouble-free use. We stand behind our stove with a 5-year warranty on defective parts. If you have any issues with the stove, please contact us at support@tinywoodstove.com.

Please note that shipping damage is not a warranty claim. If your stove was damaged in shipping please contact us immediately upon receipt so that we can repair or replace it, and file an insurance claim if necessary. We only have 30 days from the ship date to file an insurance claim with the carrier for shipping damage.

# STOVE DIAGRAM AND TECHNICAL DATA

## PARTS DIAGRAM

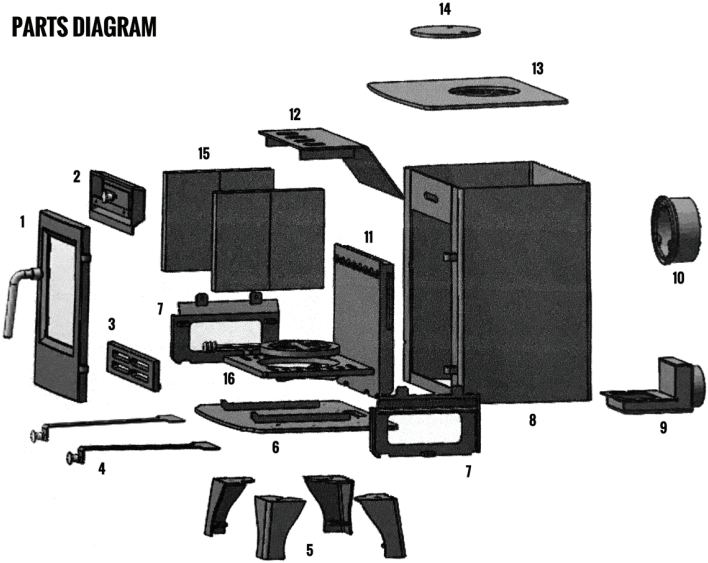


1. Door + Handle + Glass
2. Tertiary Air Supply / Air-Wash Manifold
3. Coal Bar
4. Primary & Secondary Air Supply Gate Valves
5. Stock Short Legs
6. Stove Bottom Plate
7. Fire Grate Support x 2
8. Stove Body
9. Direct-Air Box (Optional Upgrade)
10. Flue Flange
11. Rear Air Plate
12. Baffle
13. Stove Top Plate
14. Flue Cover Plate
15. Fire Bricks x 4
16. Fire Grate

# PRECAUTIONS

All parts of the stove are very hot during operation. Do not leave young children in the room with the stove unsupervised. Do not allow flammable items like upholstery, curtains, firewood baskets, etc. violate clearances while the stove is in operation.

- **The stove handle gets hot during operation.** Use a tool or a heat resistant glove to operate the door handle when loading the firebox.
- **Keep a functioning smoke and carbon monoxide detector in the same room as a stove.**
- **Do not use exhaust fans in the same room as the stove while it is operating.** A powerful exhaust fan could pull combustion gases out of the stove into the living space by changing ambient pressure.
- **Never use liquid fuel to start a fire in the stove.** It could cause an explosion inside the stove or the flue system.
- **Never use water to put out a fire in a wood stove.** Water can explosively flash to steam, which can cause severe scalding burns.

**Avoid overfiring or underfiring the stove.** We recommend monitoring the stove and flue temperatures with a thermometer. Underfiring can cause excessive creosote formation and increase the risk of a chimney fire. If any part of the stove or flue system starts to glow red, close the air controls until the stove cools down. Don't leave the door open for a long time while the stove is burning or the stove and flue system can overheat.

# RECEIVING YOUR STOVE

**Your stove is heavy. It's best to have two people move and install your stove.**

Once the stove is delivered, please unpack it right away. We purchase insurance on each stove through the shipping company, but we only have 30 days from the ship date to file a claim.

If you find any damage or blemishes on your stove, please snap a few pictures and email them to us at **support@tinywoodstove.com.**

# ASSEMBLING YOUR STOVE

## REQUIRED TOOLS:

Phillips Screwdriver, 10mm Socket or Adjustable Wrench, Utility Knife

*For a detailed stove unboxing video, check out our videos page on our website:*

***https://www.tinywoodstove.com/videos/***

1. Cut any plastic straps around the crate with a utility knife. Remove the Phillips screws on the crate legs. This should release the top and sides of the crate from the base. Lift the crate straight up to remove it.

2. Remove the box, cover plastic and paper from the stove. Remove the coal bar, baffle, wrapped flue flange and legs from inside the firebox. To remove the baffle, lift up and forward until the bottom is free from the rear air plate. Once the baffle is clear from the air plate, remove from the firebox by turning it 90 degrees so it fits through the door. NOTE: Due to weight restrictions, these parts ship in a separate box for the Dwarf 5kW.

3. Close the door and gently set the stove on its back. It's best to lay the stove on a raised surface so the crate bottom is off the ground when the stove is supported on its back.

4. Using a 10mm socket or adjustable wrench, remove the bolts on the bottom of the crate. Remove crate bottom. Unscrew and discard the threaded rods from the bottom of the stove.

5. INSTALL AIR CONTROLS - Unwrap & bolt on the (2) air controls to the bottom of your stove. There are two slots on each control arm. The slot toward the front of the stove (closer to the handle) is secured with a short bolt and a washer. The rear slot is secured with the spring, the longer bolt, and a washer. Tighten these bolts enough to hold the air valves against the stove body, but not so tightly that they restrict the free movement of the air control. Open and close your air controls a few times to verify that they move smoothly. Once you're satisfied, open the stove's door, remove the ash pan, and install a nut on each of the air control bolts protruding into the bottom of your stove to lock them into place.

   If you are using the Direct-Air Intake Box, bolt this on next. The direct-air box gets bolted on over the primary & secondary air gate valve on the rear of your stove.

6. INSTALL LEGS - Unwrap the stove's legs and use the provided bolts and washers to secure the legs to the bottom of the stove. If you are installing the Tall Legs or the Wood Storage Stand, install them instead of the stock short legs. Stand stove up on its legs or storage stand.

7. INSTALL THE FLUE FLANGE - Using a Phillips screwdriver, install the flue flange on either the top or rear exit of the stove, whichever you are planning on using. If installing the flue flange on the top of the stove, use the short hardware that's installed with the flue cover plate (#14 on parts diagram). If you use the longer hardware with a top exit, the baffle will not fit. Install the flue flange cover plate on whichever opening the flue flange is not installed on.

8 REINSTALL THE BAFFLE - The baffle must be turned 90 degrees vertically to fit through the stove door, then realigned horizontally once inside the stove. Position the holes in the baffle at the top front of the stove. Lift the baffle up and forward until the bottom of the baffle is above the rear air plate then set the baffle on top of the rear air plate. Rest the front of the baffle on the air-wash manifold (#2 on parts diagram) inside the front of the stove.

9 INSTALL / SECURE FIRE BRICKS - Fire bricks ship preinstalled in Dwarf 3kW and 4kW models. The Dwarf 5kW fire bricks are shipped separately from the stove in the parts box. To install fire bricks in the stove, loosen the fire brick support bolts that are installed horizontally into the fire grate support on either side of the firebox (#7 on parts diagram). Slide the firebricks downward into the channel in the side of the fire grate support. Fire bricks should be installed vertically, two bricks per side. Tighten the fire brick support bolt finger-tight. Overtightening the support bolt can break the fire brick.

***NOTE:*** If it's difficult to get the fire brick to fit in the channel, loosen the fire grate support mounting bolt, which is located on the underside of the stove, between the legs. Loosening the bolt will give some extra play in the fire grate support, which should allow room to slide the fire brick in. Re-tighten the bolt when the bricks are in place.

***NOTE:*** The Dwarf 3kW LITE model uses ceramic fiber refractory panels instead of fire brick to save on weight. Since the panels are lightweight, bolts are not needed to hold them in place, and the fire brick support bolts are omitted from this model.

10 REINSTALL COAL BAR - The nubs on the coal bar go on the bottom and face the back of the stove.

11 PERFORM OUTSIDE BURN - It's best for the stove to come up to temperature for the first time outdoors or in a well-ventilated area. Once the stove is assembled, insert a small section of pipe into the flue flange and make an initial fire outside. The high-temperature paint on the stove will smoke the first time it reaches a new high temperature. The stove body operating temperature

is 400-650 degrees F, so you want to get it in that range. One firing is usually sufficient to cure the stove. To get a more thorough cure, make two or three successively hotter fires, allowing the stove to cool to the touch between each burn and try to get the entire stove body to reach 650 degrees on the final burn. If the first fire is inside, it's best to keep windows and doors open for ventilation.

# INSTALLING YOUR STOVE

Prior to installing the stove build a safe zone for it. This zone consists of hearth of proper size and thickness, proper clearances to combustible materials, and (in some cases) heat shields.

## DWARF MINIMUM REQUIRED CLEARANCES

**Sides:** 16" from combustibles
**Rear:** 18" from combustibles
**Single Wall Stove Pipe:** 18" from combustibles
**Insulated Chimney Pipe:** 2" from combustibles

Clearances can be reduced with a non-combustible heat shield. Larger clearances are always acceptable.

## HEAT SHIELDS

There are several types of heat shields, and each performs differently.

The most popular and effective heat shield is made of either ½" thick cement board or minimum 24 gauge sheet metal with 1" air space behind it, and 1" gap around the entire perimeter of the shield for air flow. The shield is attached to the wall using ceramic or metal spacers. The "air wash" behind the shield is very effective at minimizing the heat reaching the combustible surface behind the shield. Avoid placing spacers directly between the stove and the wall so that they don't conduct heat through the shield. A heat shield of this type can reduce wall clearances by up to ⅔, or ceiling clearances by up to ½.

An alternate heat shield design is made of ½" thick cement board with 1" non-combustible insulation behind it (Rockwool or ceramic fiberboard) and no air space. This type of heat shield can reduce wall clearances by up to ½, or ceiling clearances by up to ⅓.

Finally, a 3-½" thick masonry wall can be used as a heat shield with no air space. This type of heat shield can reduce wall clearance by up to ⅓.

For installation in homes subject to building codes, it's important to note that UL1618 (standard for wall and floor protection) does not allow a heat shield to reduce stove clearances below 12" unless the stove and the shield are tested and listed to be used together.

Since Dwarf stoves are not UL listed, an installation will not comply with building codes if clearances to combustibles are less than 12" in any direction, even if a proper custom-built or UL listed heat shield is in place. Check with your local permit office for guidance if you plan to install a Dwarf stove in a residential space.

## HEARTH

When using the add-on tall legs or wood storage stand, use a hearth on the floor for ember protection. This is some type of non-combustible material (metal, glass, tile, stone, etc) to shield combustible flooring from any embers or coals that could potentially fall from the stove. When using the stock legs add insulation under the ember protection. This can be achieved by placing a ½" thick layer of mineral fiber board under the non-combustible material.

### DWARF STOVE HEARTH PAD DIMENSIONS

**Rear and Sides:** Match clearances
**Front:** 12" (or 18" if building codes require)
**Thickness:** ½" minimum noncombustible material if using standard legs. 24 gauge minimum as ember protection if using tall legs or wood storage stand.

### NOTE RE: VEHICLES AND HOMES ON WHEELS

Before attempting an install, we recommend getting the home perfectly level front-to-back and side-to-side, then not moving it until the install is done. Doing this will allow

the use of a bubble level and a plumb bob while performing the installation. This produces a better finished result.

## LINING UP YOUR FLUE EXIT

With the stove and enclosure assembled, set the stove in place to mark up for installation. Verify that the stove is exactly where you want it and that there are adequate clearances to combustibles. Then mark the position of the stove feet on the hearth. A wax pencil is a useful tool for making temporary marks on most polished surfaces.

**Residential code generally requires** any horizontal flue sections to have a minimum ¼" rise for every 1 ft. of horizontal length. If you are using a wall exit, take this into account when lining up your wall exit.

Take care to avoid cutting electrical wires, water pipes, or studs when cutting into walls or ceiling. If not sure, check with a stud sensor and make a small hole to look into before cutting.

### ROOF EXIT:

A plumb bob can be used to find the point where flue will penetrate the ceiling relative to the flue flange or rear exit kit. If the structure has a curved or pitched ceiling, it can be useful to mark several points relative to the perimeter of the flue flange. Remember that the insulated pipe has a larger outer diameter than the flue flange and must have 2" clearance from combustibles. The hole that is cut in the ceiling will generally be 4" in diameter larger than the outer diameter of the insulated pipe. For instance, 4" insulated pipe is 6" diameter and will require a minimum 10" diameter hole.

### WALL EXIT:

The flue will penetrate the wall either directly behind the rear exit flue flange, or at some point higher on the wall. Line up the stovepipe in the configuration that you'll use, using a level to make sure the vertical pipe is plumb, and trace the outline of the pipe on the wall. With the correct location of the pipe on the wall, use half of the wall thimble to trace exactly where to cut out the wall.

## ANCHORING YOUR STOVE

The Dwarf Stoves ship with balancing feet for use in a stable structure that does not move. When using the balancing feet instead of anchoring the stove to the floor, each foot can be adjusted so that the stove is level.

When installing a stove in a structure that moves, or when wanting some extra assurance that the stove won't shift, we recommend anchoring it to the hearth. It's usually a good idea to anchor the stove to the hearth regardless of whether the structure moves, but you must anchor the stove if the structure has wheels.

To anchor your stove, remove the balancing feet and mark the position of the center of the loop on the hearth, then remove the stove from the hearth. If you have access from below the hearth, you can drill a hole at each of those points and thread a bolt through the hole from below, adding a lock washer and a nut on top to secure the stove. If you do not have access to the area below the stove, install threaded rod anchors at each of the marked points, then bolt the stove down to the anchors through the loops on each leg.

## ASSEMBLING THE FLUE COMPONENTS

The first section of the flue system should be inserted into the flue flange and sealed in place with stove gasket cement. Joints between flue pipes should be secured with either our specially designed metal locking clamps or three heat-proof fasteners (rivets or self-tapping sheet metal screws).

**All male ends of the single-wall pipe (and inner walls of the double-wall pipe) should point downward** toward the stove to keep any creosote, condensation, and dust from leaking out of the stovepipe. Note that the male/female orientation of the outer wall of our insulated double-wall pipe is opposite the orientation of the inner wall—outer wall male crimps point up, while inner wall male ends point down. Additional sealant at stove pipe joints is not required or recommended.

**The flue must be fully supported by the structure.** For roof installs, the flue must be supported at the roof line penetration. For wall exit installs, the flue must be supported at the wall penetration and at least one additional point before the flue passes the roof line. Residential code requires the top flue opening to be at least 3'

above the roof line or 2' above anything within 10'. If the flue pipe extends more than 5' above the roof line, it should be supported with an extended roof bracket.

**Roof installations must have a watertight seal.** For most installations with metal or rubber roofs, a silicone pipe boot is the best material to seal the stovepipe to the roof. The pipe boot must be attached to the surface of the roof with screws or rivets, and sealed with RTV silicone or another appropriate roofing sealant to seal the base of the pipe boot to the roof, and to seal each screw head. The top of the pipe boot where it meets the stovepipe does not require any sealant.

Pipe boots are typically are manufactured to fit a range of pipe sizes and should be cut along the formed guidelines to fit the outer diameter of your pipe. The pipe boot must fit tightly around the outside of the pipe for a good seal. The proper diameter hole in a pipe boot is approximately 20% smaller than the outer diameter of the pipe.

For installations on a shingle roof, use a metal flashing matching the outer diameter of the stovepipe and the pitch of the roof instead of a pipe boot. The metal flashing should be installed below two courses of shingles on its top edge, sealed with RTV silicone or another appropriate roofing sealant on its underside on the left and right to prevent water penetration from the side, and should not have any sealant on the bottom edge (to allow any water that gets under the flashing to drain away).

The flashing should be secured to the roof with roofing nails, and each nail head should be sealed with RTV silicone or roofing sealant. The top of the flashing (where it meets the chimney) should be sealed with high-temperature RTV silicone, a storm collar installed immediately above the joint, and the storm collar also sealed to the edge of the chimney with high-temperature RTV silicone.

**Do not attempt to seal a roof exit with just RTV Silicone or roofing sealant without flashing or a boot.** The joint will fail and leak. Use either a pipe boot or metal roof flashing with a storm collar to prevent leaking.

**Wall exits should be sealed on the outside of the structure around the the thimble with high-temperature RTV silicone to prevent water from wicking into the wall**

from outside. A pipe boot is not required for a wall exit, but can be used if water penetration is likely (for instance on a vehicle installation).

When installing a stove in a vehicle or any other structure with wheels, plan the chimney to detach as much as possible while moving the structure. A detachable chimney will help keep wind and rain out of the flue system, minimize the overall height of the vehicle, and help protect the fragile chimney parts from damage. We recommend using a clamp rather than screws to secure any joint that needs to be removed and replaced regularly.

## STARTING & MANAGING A FIRE

Proper performance of a wood stove, especially a small wood stove, requires a hot chimney to create draft.

The goal, when starting a fire, should be to bring the flue up to temperature (approximately 400ºF) as quickly as possible and create a strong bed of coals for hot, efficient burns. The best way to accomplish this is by starting a fire with plenty of small, dry kindling, and gradually working up to larger log sizes as a bed of coals grows. Putting too large of a log on a fire too soon, before having a sufficiently large bed of coals, will cause a smoky, smoldering fire.

An efficient burning fire will have little or no visible smoke exiting the chimney.

If large clouds of dark smoke are coming from the chimney, the stove is smoldering and likely producing creosote. Frequently burning smoldering fires can create dangerous creosote deposits. It's important to burn the stove efficiently and to inspect and clean the flue system regularly.

For a successful fire you need: fuel, heat and oxygen. Wood burns, "indirectly" in the sense that the log does not actually burn. The fire takes place when heat releases gases (fuel) from the wood that reacts with oxygen to make fire. Understanding this concept, that it is the gases released from the wood that actually burn, can be very helpful in starting a fire and adjusting your air controls.

1. **Clean the fire grate** from previous fire (if needed). Empty ash pan (if needed). Open the primary air control 100% (left lever pulled completely out from the stove) and the secondary air control 100% closed (right lever pushed in completely from the stove. Open air wash 100% (gate valve above the door slid completely to the right).

2. **Using a Firestarter -** Add kindling to firebox in a log cabin or tipi configuration. Light fire starter and add to kindling. Leave door cracked until the fire starter has caught the kindling on fire. Add more kindling and close the door.

   **Using Newspaper -** Loosely crumple 2-3 pages of newspaper, enough to cover the bottom of the firebox. Spread a small handful of kindling across the top of the newspaper. Add a second small handful of kindling perpendicular to the first. Light the newspaper and leave the door cracked until the kindling has caught on fire. Add more kindling and close the door.

3. **Add fuel to kindling.** Once the previous batch of kindling is burning, add fuel in batches. Start with small pieces and work up to logs as the stove heats up and the coal bed is established. The goal is a progressively larger hot fire. Opening the door before the previous batch of wood is fully lit can cause some smoke to escape the stove. Keep the door closed as much as possible. Leave air settings at the start settings until the first logs burn down to hot, glowing coals.

## OPERATION

After a hot coal bed is formed or new fuel is charred and ignited you can adjust the air controls to slow down the rate of burn if needed. It's a good idea to use a flue thermometer and dampen the stove according to thermometer readings. **Going too far above or below these temperature readings can cause problems.**

### STOVE PIPE THERMOMETER

Too Cool: <200 degrees F
Optimal Burn: 225-475 degrees F
Too Hot: 500-700+ degrees F
Note: Smaller stoves (4kw & 3kw) tend to have lower flue temps. Optimal burn will

likely be on the lower end of what a standard thermometer reads. Additionally, you will have lower flue temps towards the end of a burn cycle (all fuel is hot coals).

*Stove Pipe Thermometers are available for purchase at tinywoodstove.com
**If purchasing a thermometer from another vendor make sure it's calibrated for stove pipe and not the stove top. Stove top thermometers have a different temperature range than pipe thermometers.

Depending on the fuel you burn you will use different air settings. Here is a summary what happens inside your firebox and how each of the air controls affects the fire.

## PRIMARY AIR (Bottom Left Control)

The primary air enters the stove below the fire grate. This air supply is used when first starting a fire, when adding new fuel or as the primary air source for coal. Think about what happens when you blow directly on hot coals. With this abundance of added air blown directly on the hot fuel the chain reaction speeds up and releases more gases from within the log. Generally using the primary air controls burns the fire quicker and less efficiently.
After starting your fire and after the wood has gone through pyrolysis (thermal decomposition / i.e. black and on fire) you can shut down the primary air and turn on the secondary air.

The only exception to this is with a coal fire. Coal burns from the bottom, so a more efficient fire can often be made by closing the secondary air control to route all the fresh air through the coal bed.

## SECONDARY AIR (Bottom Right Control)

The secondary air enters the firebox through the rear air plate towards the top of the stove. After wood is ignited and there is enough heat to release a steady amount of gases it's best to introduce air directly with these hot gases - instead of through the coal bed. This makes for a slower and much more efficient burn as the smoke/gases gets ignited before leaving the firebox and gases are released from the logs at a much slower rate.

## TERTIARY AIR / AIRWASH (Top Control)

The tertiary air enters the stove just above the door through the air-wash manifold.

This air is preheated and jets down over the surface of the glass keeping the glass clean. The tertiary air control is mainly designed to keep the stove glass clean, but it does contribute some air to the bottom front (primary air) of the fire.
For dampening the stove for a slower burn a good starting point is around 50%. When the stove is dampened down too soon or too much, there won't be enough air for thorough combustion (you'll see dark smoke coming out the flue and flue thermometer will be low) and you'll have potential creosote problems.

Take some time to experiment with air settings, and get a feel for how they affect the fire. Because the flue system, not the stove itself, is producing the draft, no two installations will perform exactly the same.

### RIDDLING GRATE

The lever on the bottom left of the stove is used to activate the mechanical riddling grate. This feature is made specifically for coal use but is handy for use with any fuel. If ashes are accumulating on the bottom of the firebox, pull and push the lever back and forth to shake the ashes into the ash pan, and keep air flowing through the fuel. The riddling grate can be handy when burning wood to settle the logs into the bed of coals without opening the door. Note that the Dwarf 3kW LITE model is not equipped with a riddling grate.

### ASH PAN

The ash pan should be cleaned between fires, or as needed. It's important to note that the primary air supply is fed through the back stove behind the ash pan, so this area must be kept clear for proper functioning of the stove. When emptying the ash pan during the fire, use the provided ash pan tool and empty the pan in a fireproof container. **Do not empty the ash directly into a trash can or you could start a fire in your trash!**

# MAINTAINING YOUR STOVE & FLUE SYSTEM

## CLEANING THE STOVE

Use a brush to collect ash in the ash pan, and empty it prior to each fire, and as needed. Ashes may contain embers for hours or days after the fire goes out, so they're

best disposed of in a fireproof ash bin. Improper disposal of ashes (i.e. tossing them in the kitchen trash can) is a leading cause of stove-related house fires, so treat ashes with appropriate care.

While the Dwarf stove is equipped with a tertiary air wash to keep the glass clean, the glass will still need to be cleaned periodically. To clean the inside of the stove glass when the stove is cool, moisten a crumpled sheet of newspaper with water and dip it in some wood ash, then use the ash to scrub the glass until the deposits are removed. There are commercially available wood stove glass cleaning products, but scrubbing the glass with wet newspaper and wood ash seems to work the best.

The exterior of the stove is painted with high-temperature stove paint. As the stove wears in over time, you might scratch the paint, especially on the top cooking surface. Periodically wipe the stove top down with a thin layer of cooking oil to cure any bare metal and prevent rust, same as you would with a cast iron skillet. Cooking oil can smoke when curing, so be sure to have the space well ventilated during the next fire. We like the look of a worn in stove, but if you ever want your stove to look brand new again, you can repaint it with Stove Bright brand high-temperature paint, which is made by the same manufacturer who produced your stove's factory coating. This paint can be ordered at tinywoodstove.com.

## REPLACING FIREBRICK

Dwarf stoves are manufactured using refractory firebrick on the left and right sides of the firebox. These fire bricks are designed to hold heat, shield the sides of the stoves to prolong the life of the stove body, and reflect heat back into the fire to make your burn as efficient as possible. Fire bricks will last for years of typical use, but will eventually need to be repaired or replaced. Chips and cracks can be repaired by filling cracked joints with fire cement. If fire bricks need to be replaced, correct replacement bricks can be ordered at tinywoodstove.com.

See ***Assembling Your Stove***, Step 9 on pg 10 of this manual for instructions on changing the fire bricks.

## MAINTAINING DOOR GASKET

Your stove's door seal is designed to provide years of service, but it will wear out far

sooner than the stove itself. If the stove gasket comes loose, it can be reattached with stove gasket cement. If the gasket fails to seal the firebox, the gasket will need to be replaced.

Symptoms of a worn gasket include difficulty controlling draft even with air controls closed, or smoke escaping from the area around the door. To inspect the gasket while the stove is cold, place a dollar bill halfway in the door opening and close and latch the door. If you're able to pull the bill out from between the door and the stove with no resistance, the gasket is worn and should be replaced.

Remove the old gasket from the stove and scrape off the old gasket cement using a scraping tool like a flat head screwdriver. Cut the new braided fiberglass stove gasket material an inch or two longer than the old one, and use stove gasket cement like Rutland #77 to adhere it in place, cutting off any excess. Allow the cement to dry, then clean up any excess cement with a wet rag. Fire the stove to cure the cement.

## FLUE INSPECTION

The flue system must be inspected and cleaned on a regular basis. The frequency of cleaning will depend on how you use the stove—how often you use it, what type of fuel you use, and what temperatures it runs. We recommend inspecting a new installation weekly for the first month, then on a monthly basis during the heating season (cleaning as needed). If you experience deteriorating performance or puffs of smoke entering the room when opening the door, inspect the flue. If there is ⅛" or more of build-up on the wall of the flue, clean it before using the stove again.

Depending on the installation, inspection may be done from inside the stove by removing the baffle (part #12 on the parts diagram) from inside the stove. The baffle sets on the rear air plate and the front air wash manifold. To remove, lift up and forward until the baffle is clear of the air plate then drop down into the firebox. Turn the baffle 90 degrees to get it out the door. To inspect from inside the stove, use a flashlight and mirror or a phone camera to see if there is any build up on the interior walls of the pipe. If you have access to the roof, simply remove the rain cap and inspect the interior of the pipe from above. If you have a rear exit kit or a wall exit, the flue can be inspected by removing the cleanout cap at the bottom of the tee.

## CLEANING FLUE

**Failure to maintain the flue system can lead to poor stove performance and chimney fires.**

To clean the flue, use a chimney brush that will fit the diameter of your pipe. If there is excessive creosote buildup that is glossy and hard it's best to burn a Creosote Remover stick which loosens buildup making it easier to brush. (Burning a Creosote Remover stick is not a substitute for mechanical brushing).

Brush the interior of the pipe until buildup is removed.

Avoid breathing creosote dust. Use of a NIOSH approved respirator is recommended when cleaning your flue system. You can purchase a drill driven chimney cleaning system and Creosote Remover sticks at tinywoodstove.com.

# SOURCING AND PROCESSING FIREWOOD

The best fuel for your stove is thoroughly dried hardwood with a moisture content of less than 20%. A wood moisture meter can be purchased for less than $10, and is a great investment if you're going to be buying firewood or curing your own. Avoid burning wet wood in your stove. For wood to burn, water must be driven off first, which consumes heat. Wet wood lowers the BTU output of the stove and cools combustion gases which can cause poor draft and creosote formation.

To cure firewood, split it and stack it loosely in a sunny location, perpendicular to the prevailing wind. Cover the top of the stack only to keep precipitation off of it. The sides need to be exposed to allow airflow.

**Different types of wood require different curing times, but in general, firewood needs to cure for a minimum of six months before it's used.** Ideally, most firewood should be seasoned for 18 to 24 months. Most firewood purchased in bulk has not been seasoned sufficiently for immediate use, so you'll need to purchase it at least a year in advance.

Even if the wood dealer says that the wood has been drying for a year, you should examine it before using it. Wood does not dry quickly until it is split and stacked. A tree that has been down for over a year might still be more than half water. Look for cracking on the cut ends of logs and bark that is falling off as good indications that firewood is properly seasoned.

**Properly cured firewood will weigh less than wet wood, and will make a sound like bowling pins when knocked together. Wet wood is heavy for its size, and makes a dull thud when knocked together.**

The best way to tell if wood is properly cured is to use an electronic wood moisture meter. Split a log and take a measurement from the center of the newly cut surface, parallel to the grain. Properly cured wood should read less than 20% moisture content in the center of the log. If the wood reads higher than 20%, it needs a few more months to cure.

**Soft wood has a lower BTU content than hard wood because it is less dense.** If you burn soft woods in your stove, be sure that they are properly cured, keep the logs small and the air controls as open as possible (to assist with complete burning), and inspect and clean the chimney more frequently. Avoid sappy soft wood like pine, which can cause excessive creosote formation. We have simple firewood moisture meters for sale at: tinywoodstove.com.

## SOURCE IT WHERE YOU BURN IT

Don't move air-dried firewood across long distances—it can potentially transport invasive species. Firewood often contains wood boring insects, which are spread by moving firewood across long distances. Introducing a new wood boring insect can be devastating to local forests, so be mindful of your firewood source. If possible, find firewood within 10 miles of where you'll use it. Don't travel more than 50 miles with air-dried firewood. If you must travel with firewood, look for bundles of firewood from the hardware store that are labeled "kiln dried." Firewood that has been heated in a kiln is usually safe to transport, since all the insects inside it have been killed. Manufactured pressed wood logs or bricks are also safe to transport, and are a good option for long, clean-burning fires.

**RECOMMENDED FIREWOOD LENGTH**

Dwarf 5kW 10-12”
Dwarf 4kW 8-10”
Dwarf 3kW 6-8”

## ALTERNATE FUELS

Your wood stove can be used to burn a variety of solid fuels aside from wood. Most Dwarf stoves (except for the 3kW LITE) can burn anthracite coal. Charcoal can also be used in your wood stove. You can use hardwood pellets by adding a basket insert that fits inside the firebox. We haven’t tested dried cow chips yet, but we hear this is a viable fuel source.

Unacceptable fuels for the stove include any liquid fuels, which could cause the stove to explode. Do not burn plywood, OSB, or other wood products containing glue, since the burning glue can be toxic, and can cause hard to remove deposits inside the flue. Don’t burn trash, leaves or pine needles. Newsprint can be used as tinder for starting fires, but don’t burn large quantities of paper in the stove.

If you’re going to burn coal, we recommend anthracite coal. Bituminous coal will also burn, but it gives off a lot of soot which is bad for air quality, makes a mess on the roof, and will clog up the flue system fairly quickly. If you must burn a dirty fuel like bituminous coal, be sure to inspect and clean the flue system frequently.

Coal burns very differently in the stove than wood. Wood fires burn from the top, coal fires burn from the bottom up, so keep the primary air open and close the secondary air to keep the fire fed with fresh air from the bottom.

## DIRECT-AIR

Direct-Air is a popular option for wood stoves. It allows the stove to connect its air intake to an outside air supply so that the stove isn’t using warm air from inside of the living space for combustion.

The Direct-Air kit for the Dwarf stove connects the primary and secondary air supplies to outside air. A small amount of inside air is still used for the tertiary air wash, which helps keep the stove glass clean.

There is some confusion about whether supplying a wood stove with outside air is necessary for the safe operation of a wood stove in a small space. A wood stove exhausts combustion gasses outside, so it won't deplete the oxygen in your small space the same way that a catalytic propane heater might.

Most spaces are not airtight enough to cause a problem, but if your space is very airtight, the stove might not draft well without a Direct-Air kit. If this is the case, the stove will be difficult to light, and may release some smoke into the room when you first try to light it. If the stove is not drafting well but cracking a window near the stove fixes the problem, your space may be a good candidate for a Direct-Air kit.

Another reason people opt to sue a Direct-Air kit is it makes the stove more efficient. Instead of using your interior warm air for combustion you use exterior air. This will help keep heat inside the living space, rather than sending it up the chimney to be replaced by cold outside air being pulled in. If your space becomes drafty when operating the stove, adding a Direct-Air kit may help keep cold drafts to a minimum.

# FLUE DESIGN

## UNDERSTANDING DRAFT

The flue is the "engine" of your wood stove. In order to function, the stove must be connected to a flue system that pulls the combustion air out of the stove, and, in turn, pulls fresh air into the stove through the air intakes. **Without a flue creating adequate draft, a wood stove will not work properly.**

The flue system functions on differences in air pressure. Since hot air is less dense than cold air, low pressure hot air tends to rise, while high pressure cold air tends to sink. If you heat a column of air inside of a vertical pipe, the rising column of gas will move in a continuous vertical motion that will pull gases into the column at the bottom and exhaust them at the top. In a flue system, this vertical movement of gases is called

"draft." A properly constructed flue will actively pull combustion gases out of the stove, and in turn pull fresh air into the stove through the air intakes.

**The height of the chimney affects draft.** Since air pressure decreases as distance above sea level increases, a taller flue system will generally have a larger pressure difference between the stove's air intake at the bottom, and the chimney cap at the top. A larger pressure difference will create a stronger draft.

**The temperature of the flue system affects draft.** Since draft depends on hot air rising, a cold chimney can cause flue gases to slow down and weaken. In order to keep flue gases hot and moving in cold weather, insulated pipe is required for all of the chimney parts outside of the structure.

**Weather can affect chimney draft.** Outside temperature, wind, and humidity can affect the air pressure at the top of the chimney, and change the draft dynamic. Wind in particular can cause large effects on draft strength, sometimes even pushing air downward through the chimney and back into the living space.

**Altitude affects chimney draft.** Air pressure is lower at higher altitudes, but the pressure difference between any two given heights is logarithmic, not linear. The pressure difference between the top and bottom of a 10 foot chimney in the mountains will be less than the pressure difference seen by the same chimney at sea level. Chimneys at higher altitudes may need to be taller to produce the same draft strength.

**The ambient pressure inside the structure can affect draft.** If a structure is relatively airtight and there is an open window or roof vent near the top of the structure, or if there is recessed lighting in the ceiling allowing airflow into a vented attic, the rising warm air escaping from the top of the house can compete with the stove for the limited fresh air supply. The heated envelope of the house should never be taller than the chimney. House pressure problems can be even more severe if there is a powered exhaust fan competing with the stove. Finally, if no air is escaping the house elsewhere, but there is insufficient air leaking into the structure to replace the air going up the chimney, poor draft can result.

Horizontal runs and bends can affect draft. Horizontal sections also slow down draft,

and should be kept as short as possible or eliminated entirely. Elbows in the flue negatively affect draft by creating drag to the free flow of gases through the system.

## CONSIDERATIONS FOR SMALL SPACES

**Wood stoves in small spaces are inherently at a disadvantage, and can be especially sensitive to poor flue design.** Flue systems installed in small spaces tend to be shorter than traditional spaces. A rule of thumb for traditional construction is that a distance between the fire and the top of the chimney should be no shorter than 15 feet. This distance for a tiny house on wheels may be around 10-12 feet total, while a flue system installed in a van may be as short as 5 feet with a detachable chimney deployed. Shorter flue systems can draft well, but they are inherently at a disadvantage when compared with taller traditional construction.

Stoves sized for small spaces tend to have smaller diameter flue systems, which makes the flue gases more vulnerable to cooling before they escape the chimney. Since a smaller stove pipe has more surface area relative to its cross-sectional area, the flue gases are in closer contact with the walls of cold walls of the flue. Use of insulated pipe can help keep the stove pipe walls hot, and in turn, keep the flue gases hot and moving out the vent.

## MODERN STOVE DESIGN CONSIDERATIONS

Antique and potbelly style stove designs are often not very airtight, so they tend to send a lot of heat up the flue system, rather than into the living space. This makes them inefficient heaters, but it does tend to create strong draft. The draft is so strong, in fact, that the manufacturer of a stove of this style will require a damper to be installed in the flue system to help slow the draft down.

Newer airtight stove designs are much more efficient heaters and far easier to control. An airtight stove typically does not require a damper in the flue, since the built-in air supply controls are sufficient to control draft. Modern efficient models, like the Dwarf stove, also use baffles to slow down combustion air, which helps improve heat transfer into the room. But because more heat goes into your space and less heat goes up the chimney, the flue gas temperatures from more efficient stoves tend to be cooler.

Efficient stove designs like the Dwarf Stove inherently do not draft as strongly as

inefficient potbelly style stoves, so they require more attention to good flue design.

## VENTING INTO AN EXISTING MASONRY FIREPLACE

If you intend to vent your stove into an existing masonry fireplace, you will need to install a solid-fuel rated chimney liner kit that matches the size of the stove flue exit.

If you have a factory built fireplace, it's likely that the existing flue system is not rated to a high enough temperature to accept a wood stove. If you're not sure which kind of fireplace you have, you should contact a professional for a consultation prior to attempting installation of a wood stove into an existing fireplace.

Your wood stove cannot share a flue with other appliances. If there are other appliances venting into a masonry chimney, they will either need their own separate liner, or you'll need to find somewhere else to vent your stove.

## FLUE OPTIONS

All of our Dwarf Stoves (with the exception of the Cookstove Combo which can only vent out the top) have the option to connect the flue to either the top or the rear of the stove. If using the rear stove exit, we offer a rear exit tee with a cleanout cap to make the 90 degree turn to vertical from the back of the stove. The tee allows for easy access for cleaning, and minimizes the chances of a blockage created by falling debris in the chimney. Don't use an elbow for the rear exit.

Sometimes the stove can't be installed directly below the roof exit. In those cases, it's usually acceptable to use two 45 or 30 degree bends to adjust the alignment of the flue. Too many bends will interfere with proper draft. Use as few bends as possible. Two 45 degree elbows are usually acceptable unless the flue system is especially short. Always use elbows in pairs to return the chimney to vertical. Chimneys terminating at angles other than vertical don't draft as well, and are susceptible to downdrafts caused by wind.

Certain structures won't allow a roof penetration. In those cases, a wall exit may be the best option. Wall exits are far less efficient than a roof exit because the exhaust gases have to travel horizontally through the wall. Avoid a wall exit if possible. This design doesn't seem to work consistently for stovepipe sizes smaller than 4", so if you have a 3"

stove, you should plan for either a roof exit or a larger stove.

## CONSIDERATIONS FOR VEHICLES

We don't recommend using a wall exit in a vehicle—a roof exit is best. Vehicles tend to be especially short, so there is not as much vertical flue to make up for the horizontal run through the wall. If the wall exit is installed in the side of the vehicle, that puts the exterior chimney in an exposed position where it could easily be damaged by rocks or tree branches while driving. If a wall exit must be used in a vehicle, we recommend installing it on the back wall where it's most protected.

When installing a wood stove in a structure that moves, such as an RV, a bus conversion, or a tiny house, it's important to design the chimney so that it doesn't protrude too far above the roof line, while still providing enough height to provide sufficient draft, protect the structure from sparks, and avoid downdrafts. In these cases, a detachable section of insulated flue pipe can be used. Before departing, most of the chimney can be removed and replaced with a driving cap to keep wind and rain out of the flue system, protect fragile chimney parts, and lower the overall height of the vehicle.

While the use of self-tapping screws at each pipe joint is an acceptable method for securing sections of pipe together, we recommend using a clamp instead for any joint that is repeatedly removed and replaced, like the one used to take down a detachable chimney. Heat resistant lubricant, like aerosol graphite, can be used on the clamp's moving parts to prevent binding.

**You should never attempt to burn a wood stove while the vehicle is moving.**

## SINGLE VS. DOUBLE VS. INSULATED DOUBLE WALL PIPE

Single wall stovepipe can be used inside the living space to get more heat out of a small wood stove. However since single-wall pipe allows heat to escape into the room, it also causes the flue gases to cool, which slows them down. And since the pipe gets as hot as the stove, single-wall pipes require 18" clearance to combustibles.

Insulated double-wall pipe includes a layer of heat resistant insulation between an inner and outer wall. Insulated pipe helps keep flue gases hot and moving, even when the area around the pipe is cold. The insulation also keeps the outer surface of the pipe

much cooler, so that clearance to combustibles is 2", though the outer surface of the pipe does still get hot. Insulated double-wall pipe is usually used for penetration through a structure, since it's allowed to be relatively close to combustibles. Insulated double-wall pipe is also a good choice for all the pipe outside of the structure, since it keeps the flue gases hot and moving.

Double-wall pipe (without insulation) is also available from some manufacturers. The outer wall of double-wall pipe gets hotter than double-wall insulated pipe, but not as hot as single-wall. Typical clearances to combustibles for double-wall pipe are 3 to 6 inches, depending on the manufacturer.

If you have an especially long run of stovepipe, if you want to decrease the amount of heat your stove gives off into your living space, or if you want to minimize required clearances, you may want to use double-wall insulated pipe for the entire flue. Our insulated pipe can be attached directly to our Dwarf Stove flue flange by crimping the inner wall and sealing to the flue flange with stove cement.

## RUNNING A FLUE THROUGH AN ATTIC OR LOFT

If there is significant space between the ceiling above the stove and the roof, for instance if the stove is installed below a loft or attic space, you must use insulated pipe to pass through the space, and you must build an enclosure to enforce the pipe's 2" clearance to combustibles.

## ATTACHING PIPE TO THE FLUE FLANGE

The first section of stovepipe should be secured to the flue flange with stove cement. Our Dwarf Stove flue flange is a female fitting, and is meant to have the crimped male end of the stove pipe fit inside of it. Other manufacturers may have a male flue flange. In that case, you may need to cut the male crimped end off of the pipe to make a female end, or you might need to more aggressively crimp the male end so it fits inside the flue flange.

Use a stove cement from a tube like Rutland #77, if the stove pipe fits tightly into the flue flange. If the pipe fits loosely inside the flue flange, or if you're using a rear exit, you may want a thicker product like Hercules High Heat Furnace/Stove Cement.

**To apply stove cement**, To apply stove cement, first wet both the flange and pipe then coat both mating surfaces with cement. Slide the male end of the pipe inside the flue flange. Thoroughly wipe off any excess cement from the inside and outside of the pipe before curing—it's difficult to remove cured cement from the stovepipe.

If you plan to install screws through the flue flange for additional security, install them before curing the cement. Let cement set for 1 hour then fire stove to cast the cement.

## CONNECTING SECTIONS OF STOVEPIPE

Stovepipe sections need to be secured together at every joint. The only exception is the center joint in a telescoping pipe, which should be allowed to move freely.

Joints between the single- and double-wall pipes can be secured with a clamp or with three heat-proof fasteners (rivets or self-tapping sheet metal screws). We think clamps look better than screws for most installations, but screws are cheaper, and can be useful at joints where clamps are not holding the pipes securely enough. Clamps are preferable at any joints that are frequently disassembled, such as detachable chimneys installed on vehicles.

It is not necessary or recommended to add sealant to every pipe joint. Since your stovepipe expands and contracts as it heats and cools, any rigid sealant used in the joints is likely to fail.

## SUPPORTING THE FLUE SYSTEM

The flue system needs to be firmly supported at a minimum of two points. For most installations, these points are the stove flue flange and the roof penetration.

In roof installations, a bracket should attach to the stove pipe at the penetration, and secure it firmly to the roof. If you're using one of our roof install kits, a roof support bracket is included for this purpose. Depending on the installation, in order to fit the roof support bracket under the pipe boot, you may need to install the roof bracket either upside-down or on the ceiling above the stove instead of on the top of the roof. Check that the bracket fits under the pipe boot and make any necessary modifications before finalizing the install.

In wall exit installations, a tee support bracket should attach to the stovepipe at the wall penetration, and secure it firmly to the wall. A second bracket should secure the chimney to the wall at a higher point to keep the chimney from falling over. If you're using one of our wall exit install kits, a tee support bracket and a wall support bracket are included for this purpose. Brackets are recommended at every 6' of pipe.

Residential code requires a chimney to extend a minimum of 3' above the roof line or 2' above part of a building within 10', whichever is higher. If the chimney extends more than 5' above the roof line (or 6' in some jurisdictions), or if you're in an area that is subject to especially high winds, you'll also need an extended chimney support bracket. This bracket clamps on to the chimney several feet above the roof line and uses two arms to anchor to points on the roof at either side of the chimney.

## SEALING A ROOF EXIT

Most small space installations use a silicone pipe boot to seal around the stovepipe above the roof line. Pipe boots are appropriate for most metal or flat roofs. When installing on a standing seam metal roof, it's best to plan the install so the entire pipe boot base falls on the flat surface between the seams. Pipe boots are typically manufactured to fit a range of pipe sizes, and should be cut to fit the outer diameter of the pipe. The pipe boot must fit snugly around the outside of the pipe for a good seal, and should provide significant resistance to the pipe passing through it. The proper diameter hole in a pipe boot is approximately 20% smaller than the outer diameter of the pipe.

Silicone boots seal to surface of the roof using screws or rivets with silicone or urethane roofing sealant under the base of the pipe boot and over the top of each screw. In most installations, we recommend using high-temperature RTV silicone to seal the boot to the roof and over the top of the screws, since the installer can also use it to seal around the storm collar. If you are installing on a bare aluminum roof, like an Airstream travel trailer, and would prefer to avoid silicone sealant, a urethane sealant like Sikaflex 221 works well to seal the pipe boot to the roof. Don't use any sealant other than high-temperature RTV silicone to seal the storm collar to the chimney.

If the structure has a shingle roof, a pipe boot will not seal to the roof well. Use a metal flashing instead. After cutting the hole in the roof for the chimney pipe, slide the high side of the metal flashing under the top two courses of shingles. Secure the chimney

pipe in place before attaching the flashing to the roof to ensure it's properly aligned. Use urethane roofing sealant or RTV silicone to seal a solid vertical line under the left and right sides of the metal flashing (to prevent water entering from the sides). Do not use sealant under the lower edge of the flashing, so that any water that might get under the flashing can drain away. Use roofing nails to secure the flashing in place, and cover each nail head with sealant to prevent water from penetrating the nail holes.

A storm collar is a frequent addition to a roof exit. The collar helps to shed water away from the pipe boot or roof flashing, which decreases the chances of water penetration. A storm collar is not necessary when using a pipe boot (though it doesn't hurt), but it's required when using metal flashing. To function properly, the storm collar should be installed directly above the top of the pipe boot or flashing, and high temperature RTV silicone should be used to seal the seam between the storm collar and the chimney pipe.

If you have a roofing material that is not listed in this manual and you're not sure of the best way to seal the roof penetration, contact the manufacturer of your roofing material to ask for their recommendation.

## CUTTING YOUR STOVEPIPE

Our double-wall insulated chimney pipe is manufactured with formed male and female ends, and generally should not be cut. However, our single-wall stovepipe can be cut to fit any space.

It's usually best to cut the female end off our single-wall pipe to preserve the factory formed male end. It's possible to use a pair of sheet metal crimpers to crimp a new male end on to the single-wall pipe, but the pipe's thickness can make it difficult.

The best tool to use for cutting the single-wall stovepipe is a band saw, chop saw, or an angle grinder with a metal cutoff blade. One of the single-wall pipe clamps included with the kit makes a handy guide for marking a perfect line around the pipe as a guide for cutting. We don't recommend trying to cut pipe with a hacksaw or tin snips. It's nearly impossible to get a straight, clean cut, and the cut edge will usually be visible in the finished installation.

## PROPER MATERIALS

It can be a challenge to find vendors for solid fuel pipe in diameter less than 5” in North America. Not all vent pipe is created equal! Just because you can purchase a pipe that matches the size of the stove from a local hardware store doesn’t mean it’s safe.

Most 3” and 4” vent pipes are made for pellet or gas appliances and do not have the temperature ratings suitable for solid-fuel wood burning stoves. While pellet or gas pipe may fit the stove flue flange, it’s not rated for the high temperatures produced by solid fuel stoves like the Dwarf. Typical temperature ratings on pellet pipe are 570 degrees F, while normal operating temperature for a wood stove is 800 degrees F.

Solid fuel rated pipe is rated for up to 2100 degrees F to withstand a 10 minute chimney fire. It is made from stainless steel or carbon steel with high-temperature paint. To vent your stove stay away from pipe made of zinc galvanized steel. The stovepipe & chimney we offer at tinywoodstove.com is custom manufactured in 3”, 4”, and 5” diameters specifically for solid fuel.

## FLUE PIPE ORIENTATION

All of our stovepipe kits are designed to ensure they are installed in the proper orientation. The male end of the single-wall pipe (and the inner wall of the double-wall pipe) must point downward, toward the stove. This keeps any creosote, condensation or falling dust inside the stovepipe.

Condensation is a common occurrence inside stovepipe. Assuming complete combustion, wood will produce gases consisting of approximately equal parts by weight of carbon dioxide and water vapor. That’s not counting the additional moisture content of your wood that must be be driven off before the wood is able to catch fire. Until your entire flue system is above 212 degrees F, water will condense inside the flue and run backward toward the stove. It’s important to keep that water inside the flue system instead of leaking out of the stovepipe.

When working with our double-wall pipe, note that the male crimped end of the outer wall points up, which is opposite the orientation of the inner wall. This is because the double-wall pipe is often used outside the living space, so the outer wall is designed to shed rain water outside of the pipe. When assembling the insulated pipe, note that

neither end of the inner wall is crimped on most pieces, but the downward side fits inside of the pipe below it, just like our single-wall pipe.

### FLUE DAMPERS

Flue dampers are devices that restrict air-flow through the flue system. A manual damper is essentially a butterfly valve inside the stove pipe. This restricts the amount of air coming through the pipe allowing you to slow the burn rate.

Use of a damper is neither required nor recommended with the Dwarf Stove. Since the stove is airtight the built-in air controls are sufficient to control the draft. However, many antique and "potbelly style" stoves aren't very airtight, so they need a flue damper to control of the draft. Otherwise, the stove could heat up out of control.

## CLEARANCES

When combustible items get too close to a stove, they can catch fire. No spark is required to start a fire, just availability of fuel, oxygen, and sufficient heat. Clearance violations are one of the most common causes of stove-related house fires. Maintaining proper clearances is vital to a safe installation. All stoves should have required clearances in their documentation.

Combustible materials that are too close to your stove will deteriorate over time in a process called pyrolysis. As moisture is driven off and organic molecules break down, the temperature required to ignite the material drops. Combustible materials can appear to be fine for years, and then burst into flames without warning. Combustible materials inside of walls are especially common sources of house fires with poorly installed stoves, since the materials are hidden from view, but still deteriorating to the point that they can ignite at relatively low temperatures.

If the required clearances don't work for your space, the use of heat shields can safely reduce clearances by up to 66%. A heat shield can be as simple as a piece of sheet metal (or other non-combustible material) with a 1" air gap behind below and above. This gap creates a air-wash phenomenon that effectively keeps the material behind at safe temperatures. Without this gap and air-wash, the heat would conduct into the combustible material behind and provide no benefit.

There are various pre-manufactured heat shield options and cheap DIY options.

A heat shield can be installed on the wall behind the stove or flue, or it can be installed directly on the flue. Either way, you need ceramic or steel spacers to keep the shield 1" away from the surface it's attached to, allowing air wash behind the shield.

## ROOF INSTALLATION DIAGRAM

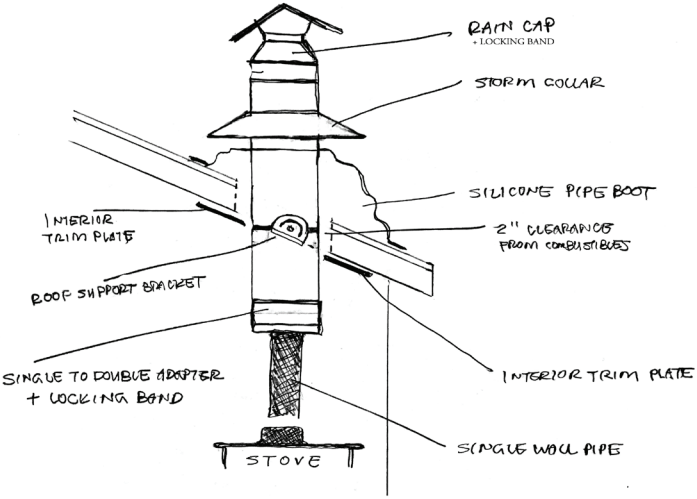

# WALL INSTALLATION DIAGRAM

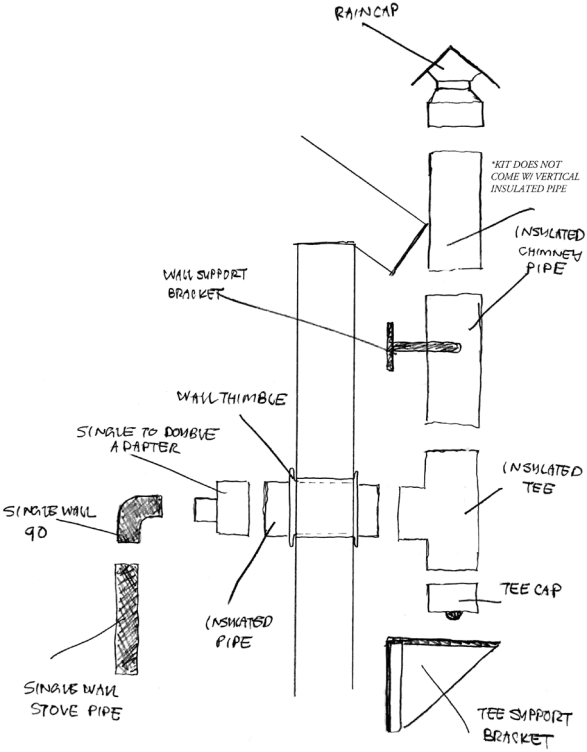


**See tinywoodstove.com for all install kit options available for purchase.**

# HELPFUL NOTES

## CONTROLLING HUMIDITY

Wood stoves produce dry heat. In small spaces too much humidity can be a problem. Wood stoves produce dry heat which can lower interior humidity. If you want more humidity in the air while the stove is running, boil some water on the stove top. Commercial cast iron steamers or a kettle with the lid removed work well. A helpful tool is a hygrometer (humidity sensor) which can help you monitor humidity levels.

## COOKING WITH A WOOD STOVE

The top of the stove can be used as a cooking surface. Using the rear flue exit of the stove will significantly increase the size of the stove top available for cooking. Typically, medium or medium-high heat (350+ degrees F) is achievable on the stove top.

Using a stove for cooking generally requires building a hot fire inside the stove. You may want to have an alternate cooking method available during the summer months when it's too hot to use the wood stove indoors.

## COOKWARE

You can use any cookware on the wood stove that you would normally use on a household range, provided it fits on the stove top. Cast iron usually performs best because it retains heat well (when preheated). Preheating pans can speed up cooking significantly and usually produces better results.

To boil water, we recommend using a kettle or a covered pan on the stove top. Moka pot coffee makers work well on top of the wood stove.

A cast iron dutch oven is a versatile cooking vessel for stove top cooking. It can be used for simmering soup or stew, in place of a low sided skillet for cooking vegetables, or even be preheated with the lid on top and used for baking.

## FIND THE SWEET SPOT

Stove tops do not heat evenly. The front edges are cooler, while the top flue exit cover plate is the hottest. Use this to your advantage. Place items that need higher heat

directly over the top flue exit cover, and items that need lower heat further toward the edge. If you're using a pan that covers the entire stove top, rotate it frequently for more even heating.

### TEMPERATURE CONTROL

Cooking with a wood stove is not like turning on a household cooktop. It takes much longer for a wood stove to come up to temperature, and cooktop temperatures typically only reach the medium or medium-low range unless you're burning the hottest fire possible. If you need to adjust the temperature of the stove higher, you'll need to build a hotter fire and wait for the stove body to heat up. If you need to adjust the temperature of the stove down, you can partially close the air controls and wait for the fire to die down, or you can use a cast iron trivet under the cooking vessel to decrease the heat transfer to your food.

## CHIMNEY FIRES

Chimney fires are unlikely to occur when burning clean, efficient fires and with regular inspection and flue cleaning. However, it's important to know how to identify a chimney fire & what to do about it.

A chimney fire sounds like unusual roaring or low rumbling sound coming from the stove or flue pipe. It's a more intense sound than the gentle whooshing sound that a properly functioning stove will usually make. A roaring chimney fire is often accompanied by an intense, hot smell, and a cracking sound. There may be sparks, flames, or thick smoke coming from the top of the flue.
If you have a chimney fire, you should immediately close the stove air controls, evacuate the building, and call the fire department. Opening the stove door can dramatically increase the intensity of the fire. Do not open the stove door unless throwing in a flare style chimney fire extinguisher. In that case, close the door immediately after throwing in the lit flare.

Even if extinguished in time to prevent further damage to the structure, chimney fires can cause serious damage to flue components. If you have a chimney fire, have the flue inspected by a qualified professional. The flue must be cleaned and any damage components must be replaced before using the stove again.

Preventing chimney fires means preventing creosote buildup with regular cleaning and minimizing the conditions that cause creosote formation. See the Maintaining Your Stove and Flue System section of this manual for cleaning and inspection recommendations.

Creosote forms when chimney temperatures are too low, when wet wood is burned, and when air supply is restricted. See the Sourcing and Processing Firewood and the Starting and Managing a Fire section of this manual for more details.

TINY WOOD STOVE

SMALL STOVES FOR TINY SPACES

# TROUBLESHOOTING

### *Problem: Smoke is escaping the stove when the door is open*

***- Cause: The door is open.***

**SOLUTION:** The stove is not meant to operate with the door open. Keep the door closed except for briefly loading wood into the stove or tending to the fire. Close the door as soon as it is loaded. Little to no smoke should escape if the fire is burning efficiently, but avoid opening the door if the fire is smoldering.

***- Cause: The fire is smoldering, producing excessive smoke.***

**SOLUTION:** Close the door and open air controls to provide the fire with sufficient

air. Avoid opening the door when the fire is smoldering. Use smaller sized fuel to establish a hot coal bed before adding larger pieces. Use fuel that has been properly cured.

### *- Cause: The flue is not hot enough to draft properly.*

**SOLUTION:** Open air controls and add small pieces of fuel to build a hot fire. Continue adding progressively larger pieces of fuel until there is a hot bed of coals and the flue is up to temperature. If the coal bed burns out before the logs burn down to coals to replenish it, then the fire is not hot enough for the log size being used.

## *Problem: Smoke escaping from the stove when the door is closed*

### *- Cause: Newly installed stove has paint that is not yet cured.*

**SOLUTION:** Stove paint must be heat cured, and it will smoke whenever it reaches a new high temperature. If you skipped the outdoor burn step in the Assembling Your Stove section of this manual, or did not burn it hot enough, smoke will come off the stove as the paint cures. Open the windows and doors of your space to ventilate the paint fumes. It may take several burns before the paint is fully cured, but subsequent burns will generally not off-gas unless reaching a new high temperature.

### *- Cause: The flue is not hot enough to draft properly.*

**SOLUTION:** It's important that the flue system is brought up to temperature as quickly as possible when starting a fire. Use kindling to build a hot fire quickly, which will heat the flue and produce draft. If you build a smoky fire before the flue is hot enough to draw out the smoke, there may be smoke escaping from the air controls. See the Starting and Managing Fires section of this manual.

### *- Cause: Restricted or blocked flue*

**SOLUTION:** Inspect and clean the flue system.

### *- Cause: Depressurized House*

**SOLUTION:** Close windows and vents in the upper areas and the downwind side of the structure. Turn off any exhaust fans.

### *- Cause: Not enough air supply available.*

**SOLUTION:** Crack a window open in the same room as the stove to provide additional air supply. If this fixes the problem, consider installing a Direct-Air kit. The window should be as close to the stove's height as possible, and on the windward side of the structure. Cracking a window or vent at the top of the structure or the downwind side may cause warm air to escape rather than cold air to enter, which could cause more draft issues.

### *- Cause: Wind creating a downdraft*

**SOLUTION:** Make sure the chimney is at least 3 feet above the roof line or 2 feet above anything within 10 feet. Trim trees if they are within 10 feet and upwind of the flue. When located in an area prone to high winds, consider replacing the roof vent with a wind directional rain cap.

### *- Cause: Insufficient chimney height*

**SOLUTION:** If the chimney is lower than 3 feet above the roof line or 2 feet above anything within 10 feet, consider adding additional sections of chimney pipe. If you are operating the stove at high altitudes, consider adding additional sections of chimney pipe.

### *- Cause: Poor flue design*

**SOLUTION:** See the Flue Design section of this manual. Consider using a roof exit instead of a wall exit. Consider eliminating elbows. Consider replacing single-wall pipe with double-wall pipe. When using an adapter to connect the stove to a chimney size other than the flue collar size, consider replacing the flue with the proper sized stovepipe.

## *Problem: Stove Not Providing Enough Heat*

### *- Cause: Poor Combustion*

**SOLUTION:** Open air controls further. Use smaller sized fuel to create a hot coal bed before using larger logs. If the coal bed burns out before the logs burn down to coals, the fire is not hot enough for the log size being used.

### *- Cause: Poor Fuel*

**SOLUTION:** Use properly cured hardwood fuel for the stove. Check the moisture content of wood using a moisture meter. Avoid using softwoods that have a lower BTU content than hardwoods.

### *- Cause: Cold drafts from doors and windows when using stove*

**SOLUTION:** Consider using the Direct-Air kit to feed the stove with outside air rather than air leaking in through door and window gaskets.

### *- Cause: Space too large, too cold, or not sufficiently insulated.*

**SOLUTION:** Other than switching to a larger stove, adding insulation to the structure and fixing air leaks to improve heating performance is the best solution. In extreme climates, covering windows with thermal shades or bubble insulation, or adding skirting below the structure can significantly improve heat retention. If there are roof air vents, consider purchasing insulating covers for them. Consider adding rugs to better insulate floors, or tapestries to insulate walls. Check the door and window gaskets for leaks and replace if necessary. Add the Direct-Air kit to feed the stove with outside air rather than sending warm inside air up the chimney.

## *Problem: Fire Bricks Cracked Broken, or Worn*

### *- Cause: Normal Wear*

**SOLUTION:** Fire bricks should last for years of normal use but will eventually need repair or replacement. Repair cracks with stove cement. Replace bricks if they cannot be repaired. See the Maintaining Your Stove and Flue System section of this manual.

## *Problem: Dirty Glass*

### *- Cause: Normal accumulation of soot*

**SOLUTION:** Clean the stove glass by crumpling a sheet of newspaper, dipping it in water and then wood ash, and using the ash to scrub the stove glass. Clean stove glass regularly to prevent difficult to remove buildup.

### *- Cause: Tertiary airwash control closed.*

**SOLUTION:** Try to keep the tertiary air control at least 50% open while operating the stove. The primary purpose of the tertiary air control is to provide an air wash over the stove glass to help keep it clean.

### *- Cause: Fire too close to glass*

**SOLUTION:** Try to keep fuel toward the back of the stove. If fuel burns too close to the glass, it can overpower the tertiary air wash.

### *- Cause: Poor fuel choice.*

**SOLUTION:** Burn properly cured hardwood fuel if possible. Avoid burning wet wood and sappy soft woods like pine. Avoid smoldering fires. Don't burn trash or large amounts of paper. See the Sourcing and Processing Firewood section of this manual.

## *Problem: Fire Goes Out*

### *- Cause: Insufficient air supply.*

**SOLUTION:** Keep air controls open enough to burn a hot, efficient fire.

### *- Cause: Logs are too big*

**SOLUTION:** Use smaller logs or burn hotter fires. If the coal bed burns out before the log burns down to coals to replenish it, the logs are too large for the fire.

### *- Cause: Wood is too wet*

**SOLUTION:** Use only properly cured wood to fire the stove. Consider purchasing a moisture meter to test fuel.

### *- Cause: Draft is too weak.*

**SOLUTION:** It's important to bring the flue system up to temperature as quickly as possible when starting a fire. Use lots of small, dry kindling when starting a fire to heat the flue and establish a bed of hot coals as quickly as possible. See the Starting and Managing Fires section of this manual.

## Problem: Stove or Flue Glowing Red

### - Cause: Over-firing stove

**SOLUTION:** Close all air controls to cool down the stove, and resume the fire after temperatures are back in normal operating range. Add fuel gradually to prevent over-firing the stove. Use air controls to adjust the intensity of the fire. Check door gaskets when stove has cooled to make sure they are properly sealing. Repeatedly over-firing can cause damage to the stove and flue components, and risks causing chimney fires. See the Maintaining Your Stove and Flue System section of this manual.

## Problem: Excessive Creosote Buildup

### - Cause: Poor fuel choice

**SOLUTION:** Use only properly cured wood to fuel the stove, hardwood if possible. Invest in a moisture meter to ensure wood is properly cured.

### - Cause: Frequent smouldering fires

**SOLUTION:** Avoid choking the fire down with the air controls. If lots of dark smoke is visible from the chimney, the fire is smouldering. Burn hotter, more efficient fires by using smaller logs, and maintaining a good bed of coals.

### - Cause: Inadequate maintenance

**SOLUTION:** Inspect and clean the chimney more frequently. See the Maintaining Your Stove and Flue System section of this manual.

# THANK YOU!

Our business is much more than selling wood stoves. Tiny living has given our family and team members the freedom to live life on our terms.

We are passionate about Tiny Living and would love to see your space! Share your pictures with us on Facebook, Instagram or by email.

**Cheers!**

**-TINY WOOD STOVE TEAM**

## KEEP IN TOUCH:

TINY WOOD STOVE
SMALL STOVES FOR TINY SPACES

**TINY WOOD STOVE LLC**
**1329 BIZTOWN LOOP**
**HAYDEN, ID 83835**

**(208) 352-3417 • support@tinywoodstove.com**

TINY WOOD STOVE
**TINYWOODSTOVE.COM**